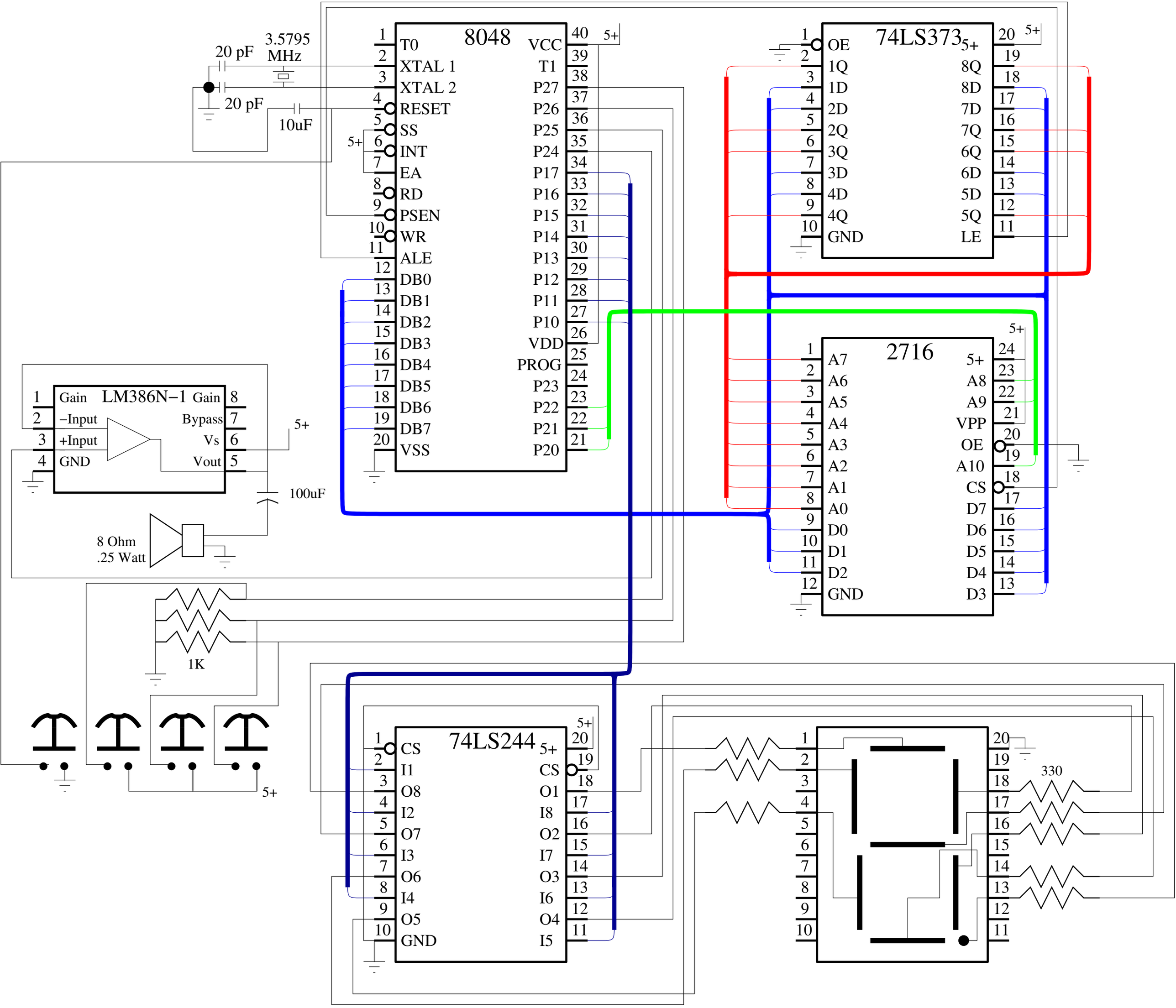

.1 uF between +5 and GND on all ICs

Design and drawings by Agatha Codrust – details at https://xfig.org